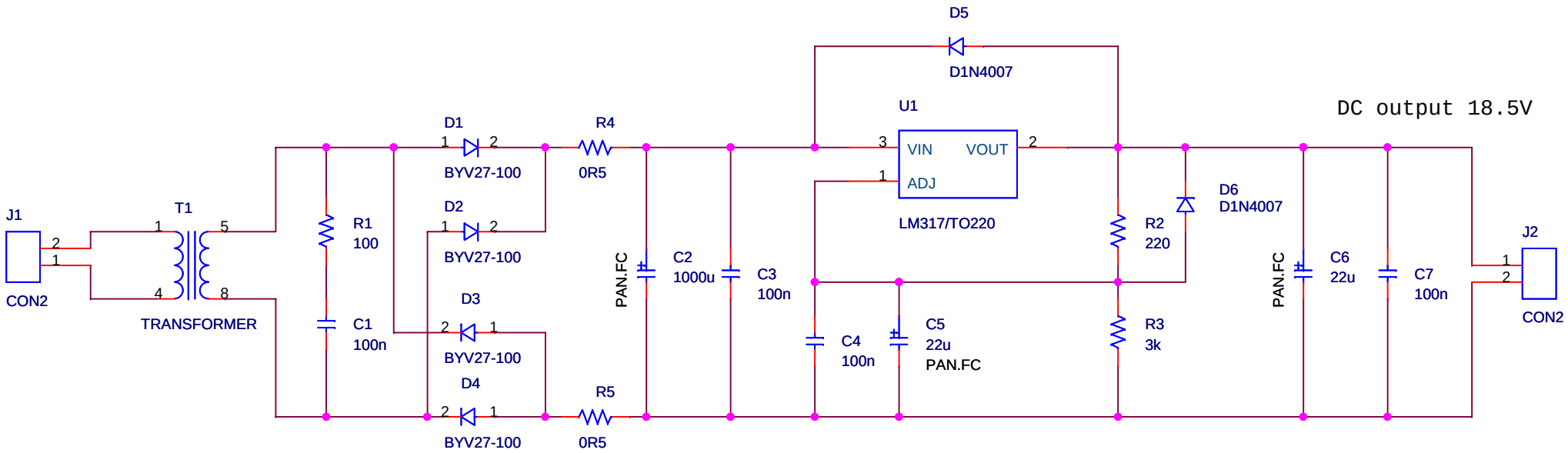

Title	myFLEA POWER SUPPLY	
Size A	Document Number Marzio Malizia	Rev 1
Date: Monday, December 01, 2008	Sheet 1 of 1	