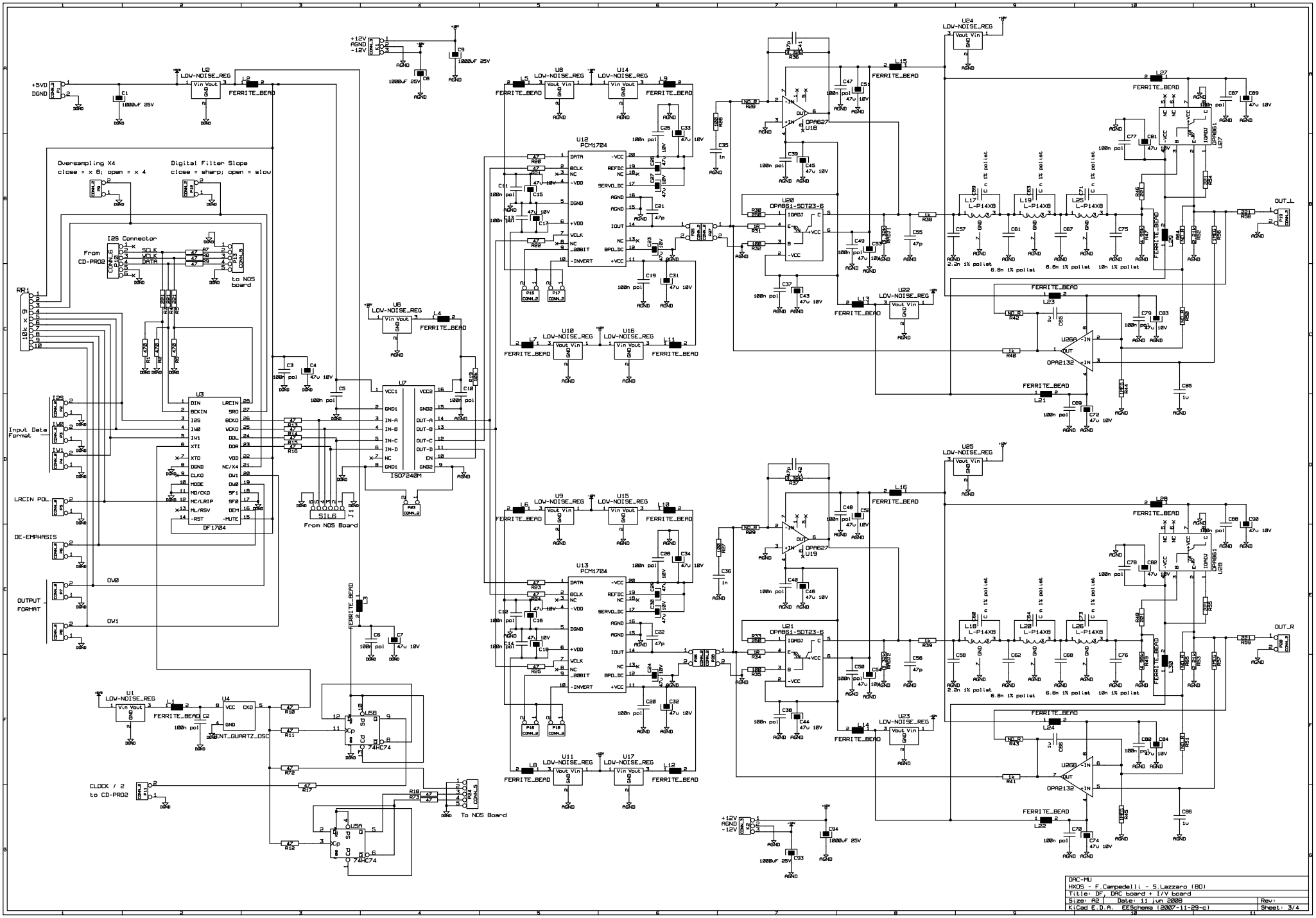

Oversampling X4
close = x 8; open = x 4
Digital Filter Slope
close = sharp; open = slow
I2S Connector
From CD-PRO2
to NOS board
Input Data Format
LRCIN POL
DE-EMPHASIS
OUTPUT FORMAT
DF1704
ISO7240M
From NOS Board
CLOCK / 2 to CD-PRO2
To NOS Board
PCM1704
OPA861-SOT23-6
OPA2132
OPA627
OUT_L
OUT_R
DAC-MU
HXOS - F.Campedelli - S.Lazzaro (BO)
Title: DF, DAC board + I/V board
Size: A2
Date: 11 jun 2008
Rev:
KiCad E.D.A. EESchema (2007-11-29-c)
Sheet: 3/4