By NORMAN H. CROWHURST

HIGH FIDELITY at LOW COST...with TWIN-COUPLED AMPLIFIER

In this new circuit reproduction is improved by using two output transformers—without pushing up the price

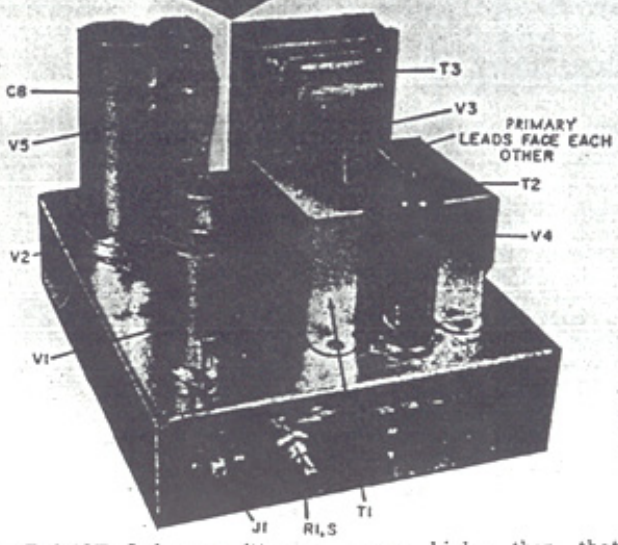

Twin-coupled high-fidelity amplifier delivers 15 watts.

SINCE I have written so many articles showing why different amplifiers cause different kinds of distortion and getting straight the way in which different circuits function, I have received a number of calls asking why don't I design a really good amplifier circuit using the best principles discussed. The reason is obvious—I have been too busy investigating and writing. However, it is time for the best principles to be put together into one amplifier. And—in response to popular demand—here it is.

Based on some of the popular misconceptions I have been bucking, some things this amplifier does will be decried by those who have been doing other things. So right here it will be well to explain just *why* the circuit is arranged the way it is:

Investigating different ways of coupling output tubes shows that using push-pull triodes gives the best chance of getting high quality with low distortion. But the output is rather inefficient, unless we go to transmitting triodes and get an output in the region of 100 to 200 watts by working in class B; in which case it is possible to achieve an efficiency comparable to, if not higher than, that obtained at lower powers with pentodes.

Using simple push-pull pentode operation, the circuit is extremely critical of correct matching, which no practical loudspeaker achieves. The circuit is much more efficient in that the tubes give a much bigger output for lower cost, but the stability tolerances of an overall feedback arrangement can become very critical, especially of practical (speaker) loads. Many low-cost "high-fidelity" amplifiers do use push-pull pentodes with some degree of feedback in the output. But they cause their designers numerous headaches in getting distortion down to a satisfactory figure (working into a resistance load), juggling the circuit so it remains stable (if in fact it does) into the variety of possible practical loudspeaker loads and also adjusting the circuit so it *sounds* reasonably good.

The third alternative is Ultra-Linear. This splits the difference between triode and pentode operation and, in most tubes, also splits the difference in efficiency. As far as the *tubes* are concerned, it is often the best method of operation as regards linearity, but this is not the end of the story. You need a very good output transformer designed specifically for this purpose or other kinds of distortion will show up that the patent specification didn't tell you about.

Unity-coupled

While Ultra-Linear operation makes pentode tubes much more tolerant of different loading, there is another fact about practical operation that allows us to use pentode operation, provided we do it the right way. This is the relationship between a speaker's impedance characteristic and power demand.

At the low-frequency end, where resonance causes a speaker's impedance characteristic to rise, resonance improves its electromechanical efficiency. What is needed is virtually constant *voltage* drive, rather than constant *power* drive. Less power is required if the speaker is matched to the amplifier in the region where its impedance is substantially resistive (see Fig. 1-a). This means that, although pentodes normally produce more distortion working into a higher load, we can utilize this impedance drive to reduce distortion by a greater ratio than the rise in impedance. The reduction in power demand from the output then results in a satisfactory distortion figure.

Reactive components in a speaker's impedance characteristic at the high-frequency end have a similar factor to help them. A speaker works best when fed by a constant voltage or high-damping-factor amplifier and, in most

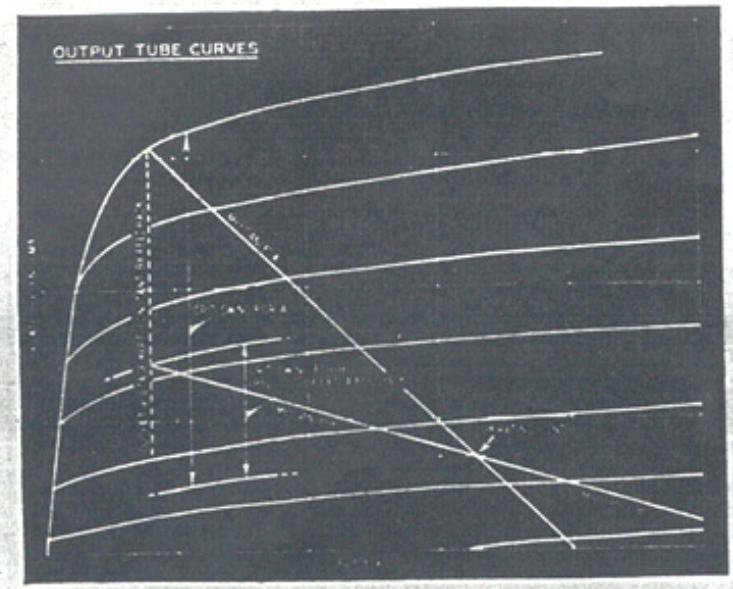

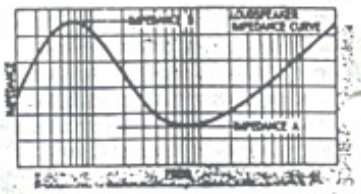

Fig. 1-a (above)—Speaker impedance varies with frequency. Fig. 1-b (left)—Properly applied voltage feedback can improve performance of pentodes into a speaker load without losing advantage of better efficiency.

program material, there is very little power at the extreme high frequencies. An amplifier using pentode output and a feedback arrangement that readjusts the tube operation to compensate for this (Fig. 1-b) and that delivers full power into a nominal resistance load over the entire audio-frequency range, will perform at least as well as the Ultra-Linear. It will be more efficient because pentode operation is still more efficient than Ultra-Linear, especially with class-B operation.

This is the philosophy behind two popular circuits, the unity-coupled by McIntosh and the Circlotron by Electro-Voice. The unity-coupled circuit uses a special output transformer, a vital feature of which is the bifilar winding of the primary. None of the transformer manufacturers produces a transformer for unity coupling, with a bifilar-wound primary. If they did, its cost would put unity coupling off the map for most amplifier builders. McIntosh can produce a competitive amplifier with this circuit only because they make their own transformers on a production line, integral with the manufacture of the amplifier itself.

The Circlotron is a circuit that is also specially adapted to production by a manufacturer who specializes in this type. The output transformer is not unusual (beyond having an unusual ratio), but the power transformer has to be because the circuit requires two separate high-voltage supplies.

Twin-coupled circuit

In the circuit I use, which I propose to call the twin-coupled circuit, instead of using two separate high-voltage supplies, or a very special bifilar-wound output transformer, I use a conventional power supply with two conventionally wound output transformers of moderate cost. The cost of these output transformers is such that two of them can be obtained for less than the one found in more conventional high-quality amplifiers.

This is made possible by the use of a circuit which does not require output transformers to respond to frequencies far beyond the actual audible frequency range required, *merely to satisfy stability criteria* of the feedback circuit. It has always seemed to be a waste to require an output transformer that maintains response flat to somewhere between 100 kc and 1 mc to amplify satisfactorily frequencies that go up to only 20 kc.

The next question is how big are we going to make this amplifier? For the first model we decided to use a couple of EL84's to deliver a maximum output of 10–15 watts. This amplifier will deliver about 10 watts rms continuous sine wave. In practical audio program material it delivers the equivalent of 15 watt rms undistorted and 30 watts peak with slightly less than 1 volt input. This is because, when a continuous maximum output is passed, the B-plus voltage drops off a little and reduces the available power. So for performance comparison purposes this can be called a 15-watt amplifier.

The reason so small an output proves satisfactory is that it does not run into sudden kinds of distortion when the output is exceeded on momentary peaks. Careful observation and tests with various amplifiers of different power ratings have shown some interesting facts. Many circuits designed to deliver 50 watts or more probably deliver their rated output with very low distortion. But try to get 51 watts from a 50-watt amplifier and you will suddenly find you are getting only about 35 watts of *distorted* output.

This explains a fact that many have already noticed: that some lower power-output rated amplifiers give apparently cleaner and better output than those with a bigger rating according to specification. Suppose we have an audio program run at an average level of, say, 5 watts, with peaks extending up to what should require 60 watts.

Using a 15-watt amplifier of good design, the average level will be pure and undistorted at 5 watts. The 60-watt peak will be slightly distorted, but clipped down to about 20 watts instead of 60. The overall result does not sound too bad.

Now the same apparent level from the 50-watt amplifier will sound considerably worse. The average 5-watt output, *by itself*, would sound the same as from the 15-watt amplifier. But the 60-watt peak drives the 50-watt amplifier into very severe distortion, so as to give only about 35 watts extremely distorted output. Not only this, but the distortion hangs over into the 5-watt level that immediately follows the 60-watt peak. Consequently even the average 5-watt level is much more distor than it sounds in the well designe 15-watt amplifier.

To make the 50-watt amplifier sound as clean as the 15-watt amplifier we have to turn the gain control down so the peaks stay well below 50 watts, which means we shall no longer have the average operating level of 5 watts. Consequently the output will not sound as loud as it does from the 15-watt amplifier.

Based on this experience, the twin-coupled amplifier eliminates the causes of sudden-overload distortion and, surprisingly enough, gives performance that compares with many 50-watt amplifiers very favorably, although it is capable of delivering only 30 watts peak undistorted and 10 watts rms.

Circuit details

My circuit uses cathode bias. This is not an essential feature of the twin-coupled circuit but is thought best for this particular tube combination because the EL84 is rated to give 17 watts from a pair, either in class AB with cathode bias or in class B with fixed grid bias. Use of the class-B arrangement would improve power supply economy and possibly allow a bigger reserve power against maximum measured power—if this is an adv tage. The disadvantage is that clas operation with fixed bias runs us into that sudden-overload trouble.

There are ways of overcoming this problem by using extra tubes in the

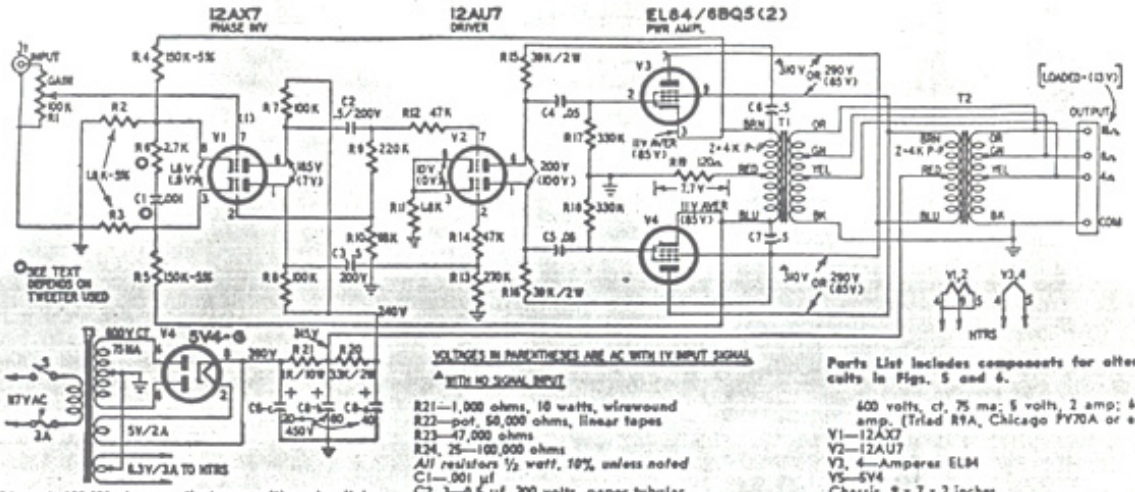

R1—pot, 100,000 ohms, audio taper, with spst switch
R2, 3—1,800 ohms, 5%
R4, 5—150,000 ohms, 5%
R6—2,700 ohms, 5%
R7, 8—100,000 ohms
R9—220,000 ohms
R10—68,000 ohms
R11—1,800 ohms
R12, 14—47,000 ohms
R13, 26—270,000 ohms
R15, 16—39,000 ohms, 2 watts
R17, 18—330,000 ohms
R19—120 ohms, 2 watts
R20—33,000 ohms, 2 watts

VOLTAGES IN PARENTHESES ARE AC WITH 1V INPUT SIGNAL
▲WITH NO SIGNAL INPUT

R21—1,000 ohms, 10 watts, wirewound
R22—pot, 50,000 ohms, linear taper
R23—47,000 ohms
R24, 25—100,000 ohms
All resistors ½ watt, 10% unless noted
C1—.001 µf
C2, 3—0.5 µf, 200 volts, paper tubular
C4, 5—.05 µf, 600 volts
C6, 7—0.5 µf, 600 volts, paper tubular
C8—40–80–20 µf, 450 volts, electrolytic, can type
F—Fuse, 3 amp
J1, 2—phono jacks
S—spst switch on R1
T1, 2—output transformers, 7½ watts, 4,000 ohms, plate to plate ct: 8-, 16-, 32-ohm secondary (Chicago Standard A-8094, Thordarson Meissner 22S21, Merit A-2997, Triad S-34X
T3—power transformer: primary, 117 volts; secondary,

Parts List includes components for alternate circuits in Figs. 5 and 6.

600 volts, ct, 75 ma; 5 volts, 2 amp; 6.3 volts, 3 amp. (Triad R9A, Chicago PV70A or equivalent)
V1—12AX7
V2—12AU7
V3, 4—Amperex EL84
V5—5V4
Chassis, 9 x 7 x 2 inches
Sockets, 9-pin shielded (2)
Sockets, 9-pin unshielded (2)
Socket, octal
Fuse extractor post
Barrier strip, Cinch-Jones 6-141 or equivalent
Grommets, ⅝ inch (4)
Grommet, ¼ inch
Tie strip, Cinch Jones 52A
Tie strip, Cinch Jones 53C (one mounting leg removed)
Miscellaneous hardware

Fig. 2—Circuit of the twin-coupled amplifier.

circuit, but, for the purpose of this amplifier, as class-AB operation gives the same output as class B, the simpler method (and the cheaper one) is to switch to cathode bias and use class AB. Fig. 2 is the amplifier schematic.

The next point involves the choice of phase inversion. One idea considered was to use the 12AX7 with one half operating as a split-load phase inverter. This would enable single-ended feedback to be used, which was one reason for abandoning it. As we shall see, there are advantages to the use of entirely push-pull feedback in this circuit. The other reason is that the split-load phase inverter comes immediately before the 12AU7 driver (V2), which has boot-strap coupling in the plate circuit to get enough swing to drive the output tubes. This means that the input grid swing to the 12AU7 on each half is just about the maximum possible by the time you reach maximum output from the EL84's. Under this condition a split-load phase inverter introduces a rather curious distortion and one which overall feedback tends to exaggerate rather than minimize.

When the grid of the 12AU7 coupled to the cathode of the split-load phase inverter begins to conduct, as it will if peak output is even slightly exceeded, it clips the waveform, the same as with any other grid current in an R-C-coupled circuit. But, as well as clipping the waveform of the drive stage coupled to the cathode, it produces a very sharp peak in the waveform fed to the other half of the 12AU7. This is because the cathode half of the split load is virtually bypassed by zero impedance as soon as grid current begins to flow in the tube it drives. This means that the tube begins to operate into the plate half of the load as a full amplifier, instead of a split-load inverter. Consequently a sudden, very sharp pointed peak, in a negative direction, appears in the plate circuit (Fig. 3).

All of this begins to happen at about the same time other circuits reach overload points. The effect of feedback is to exaggerate this sharp peak. It takes a variety of forms at different frequencies. Some places appearing as a notch, at other places it begins to look like a damped parasitic oscillation on the waveform. This is shown by Fig. 4.

This defect can be avoided by using push-pull operation throughout, which is the circuit I finally adopted. A further advantage of using push-pull operation throughout is that it allows entirely push-pull feedback. This means the output transformers can be removed from the feedback loop. Some will immediately object that this means the

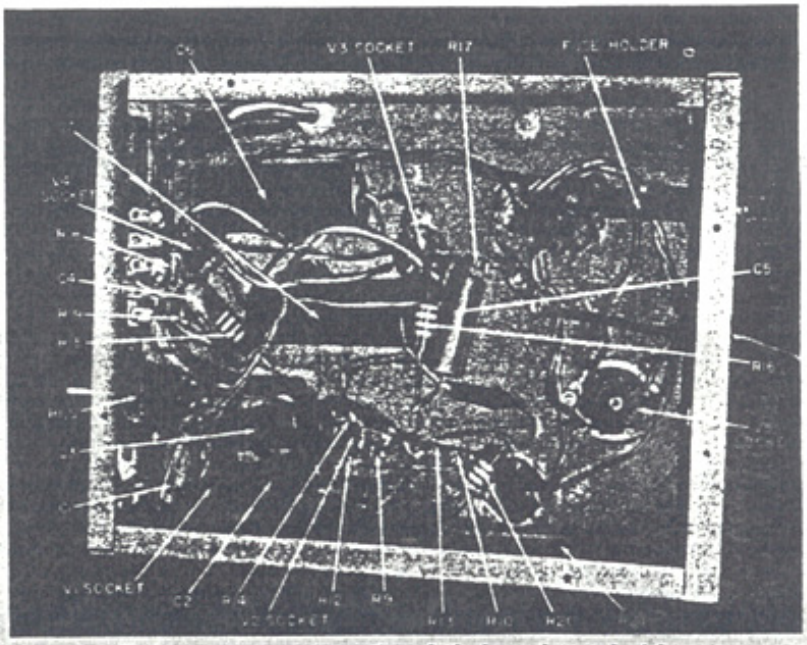

Underchassis view shows the relatively uncluttered wiring.

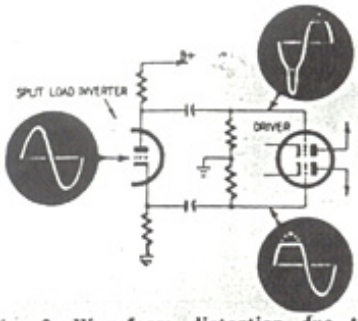

Fig. 3—Waveform distortion due to split-load and other inverters, when operated to maximum swing of following stage.

feedback does not cancel distortion "produced by" the output transformer. This is not true, as I have shown in previous articles.

Output transformers cause distortion in two ways: by the direct effect of the magnetizing current at low frequencies or due to their internal reactance at very high frequencies.

Usually the latter effect is produced, only due to the method of operating the tube or due to overall feedback. Consequently, removing the transformers from the overall feedback loop, rather than allowing them to produce distortion at the high-frequency end, frees them from the liability of doing so and also makes it possible to use a transformer that does not have to respond up to 100 kc or higher to produce satisfactory performance up to 20 kc.

At the low-frequency end, feedback from the primary is as effective in reducing distortion due to transformer magnetizing current as feedback from the secondary. So, by using overall feedback from the output tubes back to the input 12AX7, we avoid the need for *unnecessarily* high-quality output transformers and produce an amplifier which is inherently more stable than any kind of circuit with output transformers in the feedback loop.

In this circuit it is important to have close tolerance values for feedback resistors R2 and R3 in the cathodes of the 12AX7 and R4 and R5 from the cathodes of the EL84's. These resistors should be 5% tolerance or better.

The phase-inversion circuit is somewhat new, although it looks like a straight paraphase. It is different because the overall feedback operation is included in phase inversion. If the inversion provided by resistors R9 and R10 is not exact, overall feedback will correct for this.

The use of a paraphase inversion is still liable to produce an effect similar to that described with the split-load phase inverter. The presence of overall feedback in push-pull minimizes the effect, but it still can increase the distortion a little before the clipping point is reached, due to the fact that 12AU7's do not start to conduct grid current suddenly.

The remedy for this is to insert resistors R12 and R14 in series with the 12AU7's grids. This prevents the slight grid current commencement at pin 7 of the 12AU7 from being reflected into the 12AX7 grid at pin 2 and producing an asymmetrical signal through the amplifier. Instead the signal fed to pin 2 of the 12AX7 is a true inversion of that at the input, pin 7. The slight droop at maximum signal, due to the very small commencement of grid current through R12 and R14, is symmetrical and readily compensated for by the feedback arrangement, until clipping occurs on the output tubes.

Checks with the indicated values for R9 and R10, used for phase inversion, show that close tolerance is not critical. The closely controlled push-pull feedback takes care of slight fluctuations at this point. Serious deviation from the correct values, such as using 47,000 or 100,000 ohms in place of 68,000 ohms, will result in unbalance in the drive to the 12AU7 and consequent unbalance in the drive to the EL84's. This will be approximately equalized in the output due to the transformer and cross-coupling action, so the fed-back signal gets almost equalized by the time it reaches the cathodes of the 12AX7. The degree of unbalance in the drive to the 12AU7 and EL84's will be less than the degree of error in the phase-inverter values. Due to feedback action, the fed-back signal at V1's cathode will be unequal to compensate for the inequality the phase inversion tends to produce.

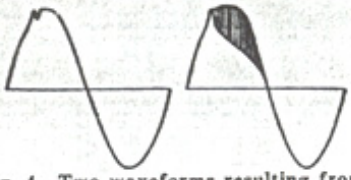

Fig. 4—Two waveforms resulting from the effect of Fig. 3 working in a feedback amplifier.

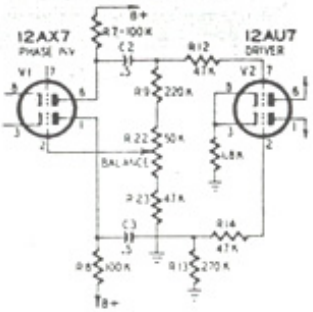

Fig. 5—Circuit shows how to add a balance control.

But to produce maximum output and avoid a form of notch distortion, which may show up above 3,000 cycles, it is best to use the indicated values for R9 and R10, as well as close-tolerance feedback resistors. If you want to incorporate a refinement to be sure of obtaining absolutely the best performance from this amplifier (and some people always like to have a BALANCE control in a push-pull amplifier) use a 50,000-ohm potentiometer in conjunction with a 47,000-ohm resistor in the phase-inverter circuit. This circuit is shown in Fig. 5. Adjust the BALANCE control for equal voltages on the grids of the 12AU7, at a 1,000-cycle input signal.

Another comparatively minor advantage of this amplifier circuit is that it readily lends itself to modification to push-pull input. This has some advantages if you wish to operate the amplifier with a compressor, expander or coded controls, using variable-gain stages ahead of it. These circuits work with much less distortion if the variable-gain tubes are used in push-pull so as to give a push-pull output. In using this amplifier, it is then possible to use push-pull coupling throughout. All that is necessary to make the change is to remove the phase-inversion components, put another 270,000-ohm unit in the grid circuit to pin 2 of the 12AX7 and bring out another input lead. This is shown in Fig. 6.

How it works

Now come the points that everyone wants to know—how this amplifier really works. It uses two output transformers, the primary of one being in the cathode circuit while the primary of the other is in the plate and screen circuits, with these cross-coupled. The secondaries are connected in parallel, not only at the ends but at each tap. This means that whichever secondary tap is used, half the output current will be delivered by each transformer.

On the primary the same resultant current flows through both transformer windings because they are virtually in series. The high voltage goes in at the center tap of one, through the tubes and out through the center tap of the other from the cathodes. So half the audio voltage is developed on each output transformer's primary.

For the extremely low frequencies, magnetic coupling from one primary to the other by the parallel-connected secondaries is sufficient to insure that screen voltage is always in phase with cathode voltage and that plate voltage is equal but in opposite phase on each tube. To take care of the middle and higher frequencies, where the leakage inductance of the transformer would loosen off this coupling, the simple expedient of placing a 0.5-μf capacitor between screen and cathode of each tube is used. This means that good coupling

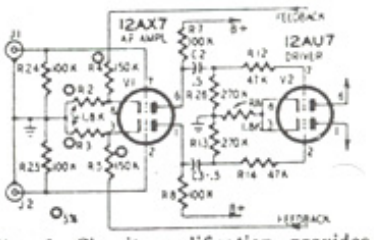

Fig. 6—Circuit modification provides push-pull input.

in the tube is maintained out to a frequency far beyond that possible in an output circuit of this type where the correct maintenance of voltage between screen and cathode depends on transformer coupling.

Here many will ask, "Why, if you are using a low-cost transformer of conventional construction, do you have to get one specially made?" This was something I hoped to avoid. But everything I could find listed had to be rejected for one of two reasons.

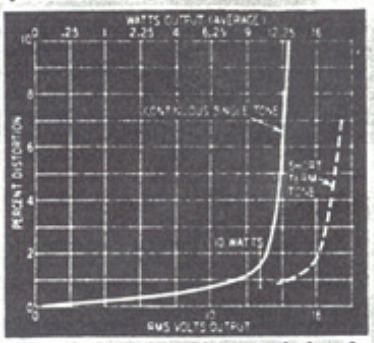

Fig. 7—Distortion characteristic: for continuous tone and short-term power demand. Harmonic content below the sharp upward turn is almost entirely second, negligible third and higher order.

Single-ratio transformers in this power rating (7.5 watts per transformer, since each delivers *half* the total) do not have the right impedances. As we have explained, the primary *of each* transformer presents half the normal plate-to-plate load for these tubes. Also the *nominal* secondary impedance needs to be twice that of the speaker system to which the two are connected, as they supply the total power in parallel, between them.

Some of the so-called "universal-output" transformers might include the correct impedance ratios. But these types are invariably intended for even poorer frequency range than we can tolerate. While complicated design, to get an unnecessary high end response, can be avoided, we still need *iron* to get the low end. Most of the universal type list a weight of less than 1 pound, which means they could never give power below 60 cycles—if they go that far.

For this reason, I designed a suitable transformer for the job (although two transformers are used, they are identical) and had them made up. Having proved that the amplifier works up to expectations, a number of well-known transformer manufacturers have agreed to cooperate with readers of this magazine by making this type available and the suitable new type numbers are listed in the parts list.

If you should have a couple of old transformers lying around that you would like to try in this circuit, remember that the plate-to-plate load must be *half* the normal value for the tubes, and the secondary rating for impedance must be *double* the speaker impedance with which you will use it.

As feedback is taken directly from the cathode, which is only at a low voltage above ground, it is unnecessary to use blocking capacitors in series with feedback resistors R4 and R5. This eliminates a potential cause of low-frequency instability.

Cathode degeneration, due to half the power being taken from the cathode circuits of the EL84's, reduces the effective voltage gain of these tubes as output tubes by about 12 db, operating into correctly matched load. (Operating open circuit, this would be a reduction of about 35 db.) This means damping factor, before any *overall* feedback is applied at all, is equal to approximately 3 or 4.

The boot-strap circuit has the effect of increasing the dynamic load line for V2 by a corresponding factor of 4 times due to the 12-db degeneration in the output stage. This more than doubles the available swing from the 12AU7, but it does not have the effect of degenerating the distortion-reducing effects of negative feedback by the same factor.

This is because V2's *gain* is not boosted by the same amount as its available *swing*. Working with the 39,000-ohm plate resistor, V2's gain, with a plate resistance of about 7,000 ohms, comes out to 39/46 times the amplification factor of the tube, which is 17. This figures to about 14.4. Using the dynamic load of 4 times 39,000 ohms, or approximately 160,000 ohms, the gain of the tube rises to 160/167 times the amplification factor of 17, or about 16.3. So the change in gain, due to the boot-strap effect, is from 14.4 to 16.3, which is little more than 1 db.

Another comment on this circuit may refer to the absence of cathode-bypass capacitors, on either the 12AU7 or EL84 bias resistors. In both instances, the use of a cathode-bypass capacitor not only increases the distortion produced by the pair of tubes, but also reduces the available swing as compared with the unbypassed condition. Thus leaving out the bypass capacitors is not a matter of economy, it produces better performance.

With the 12AU7 boot-strap drive circuit, the damping factor of this amplifier is still in the region between 3 and 4 (a little nearer to 3 than to 4). The overall feedback provided by the 150,000- and 1,800-ohm resistors is around 14 db, which boosts the basic damping factor of the amplifier by 5 times, to about 15. Winding losses in the output transformers reduce this, at the output terminals, to between 8 and 10, according to the tap used. As the winding losses in the transformer are still only a small fraction of the speaker's voice coil resistance, this cannot be regarded as a serious deterioration in damping.

From the feedback viewpoint, the overall feedback loop contains three rolloffs at the low-frequency end of the response. The reactances contributing to this rolloff are C2, C3, C4, C5 and the primary inductance of the output transformers, the latter being the limiting factor. The other values are optimized to minimize possible bounce effects with any practical load reactance possibilities. This produces level response down to 20 cycles.

At the high-frequency end, cathode degeneration of the EL84's prevents either plate or cathode circuits from introducing any effective rolloff up to a much higher limit than that produced in the other circuits. The effective rolloffs are due to the V2 grids as a capacitance loading on the plate circuits of V1 with the 47,000-ohm resistors in series, and due to the EL84 grids as a capacitance loading on the plate circuit of the 12AU7. Without any compensation, the overall response of the amplifier is level up to well above 10 kc, although there is a loss of about 1 db between 15 and 20 kc.

(*Continued bottom page* 44)

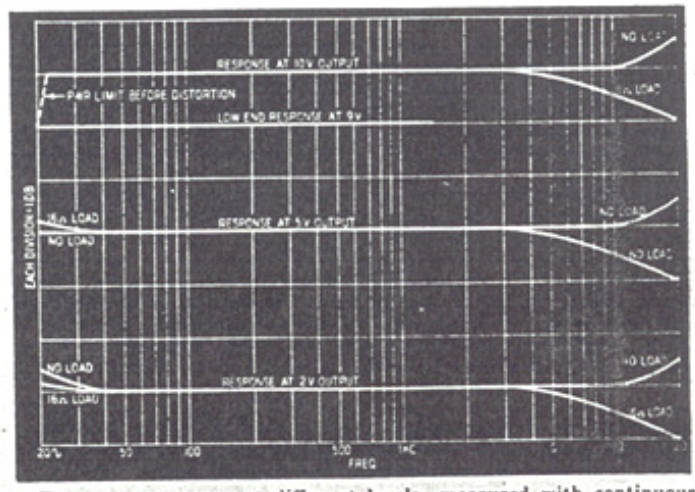

Fig. 8—Frequency response at different levels: measured with continuous tone. Taken with R6–C1 connected. Operation into dynamic speaker or combination with dynamic tweeter comes out nearer to flat than either high-end curve. For electrostatic tweeter (without internal compensation of any kind) and R6–C1 removed, response is about ± 2 db at 20,000 cycles, according to tweeter referred capacitance.

Use of resistor R6 and capacitor C1 between V1's cathodes levels off the response to 20 kc, working into a resistance load or open circuit.

The circuit as shown will work well into any dynamic speaker combination. But for a system with an electrostatic tweeter it will produce from 6–8-db boost at about 20 kc. This can be reduced to about 2 db, which will sound quite smooth, by omitting R5 and C1. Distortion characteristic and frequency response are shown in Figs. 7 and 8. The 2 db can be eliminated by inserting a resistance about half the value of the nominal impedance (8 ohms on the 16-ohm output) in series with the tweeter feed. This will affect only the 20-kc response.

Construction kinks

C6 and C7 should be arranged to get as direct a coupling as possible between cathode and screen. This is achieved by spacing the tube sockets so the capacitors may be wired directly and snugly into this position. The output transformers are then oriented to keep all primary leads short. These are the only precautions necessary in chassis layout to insure stability.

In this amplifier circuit, ground returns are no problem at all as regards stability. But careless ground returns can result in slight hum induction. This conforms with the general pattern of precautions for power amplifier wiring. C8 may have its case directly grounded to the chassis, in which case the input ground should be isolated from chassis and a return taken to the point where the supply goes to ground at the electrolytic capacitor. Alternatively the electrolytic capacitor may be isolated from ground by using the bakelite wafer that comes with it, in which case the input socket can be solidly grounded and a return taken from the supply ground back to the input. All other amplifier grounds should then be taken to the supply ground rather than the input ground, to avoid internal ripple coupling back to the input. These precautions are necessary only if you are aiming to get a hum level in the region of 90 db or even better.

This is the first constructor amplifier utilizing the new twin-coupled output circuit. The circuit is not, of course, restricted to application to EL84 tubes. For bigger outputs class-B operation could be utilized with suitable transformers for the purpose and a method of coupling between the drive and the output stage that obviates the sudden overload characteristic of class-B unity-coupled operation. If interest in a higher-output twin-coupled amplifier warrants it, we will pursue the matter and publish later a design for a further circuit with bigger output. END

updating the R-E twin-coupled amplifier

Variations of original twin-coupled amplifier eliminate instability, motorboating and give more gain and add tone controls

By NORMAN H. CROWHURST

SINCE the twin-coupled circuit was first published in November, 1957, in RADIO-ELECTRONICS, scores of people have built it and added various adjustments or improvements to suit their own particular needs. A few had to make changes to overcome difficulties. Everyone reports that it works well in comparison with everything against which it is compared. Quite a few asked for a larger version—particularly to drive currently popular inefficient loudspeakers with a larger reserve. So here are some of the questions that have come up, with the answers:

A very few asked for constructional details, such as those you might receive with a kit. But many more have written to comment how easy it was to follow the schematic (reproduced in Fig. 1), with the aid of the photos (also reproduced with this article, for the benefit of readers who missed the original story). Several commented that this was the first piece of equipment they had ever built, and they found it quite easy. I mention this as encouragement to any who feel they need more constructional details.

As I mentioned in the original article, the important thing is to keep the output tube wiring (from the transformers and the 0.5-μf capacitors between cathodes and screens) compact, following the layout illustrated. This is because this wiring carries a high audio voltage which must not be allowed to get near the earlier stages, or instability will result.

Apart from this, layout is simple. Just put the components on the chassis and mark where you want holes drilled and bigger holes made with a knockout punch, and the rest is easy. Alternatively, if you don't want to buy Greenlee punches just for this job, drill holes inside a scribed circle (using compasses), break out the middle part with wire cutters and file to a smooth round hole. It's harder work, but can make quite a presentable job.

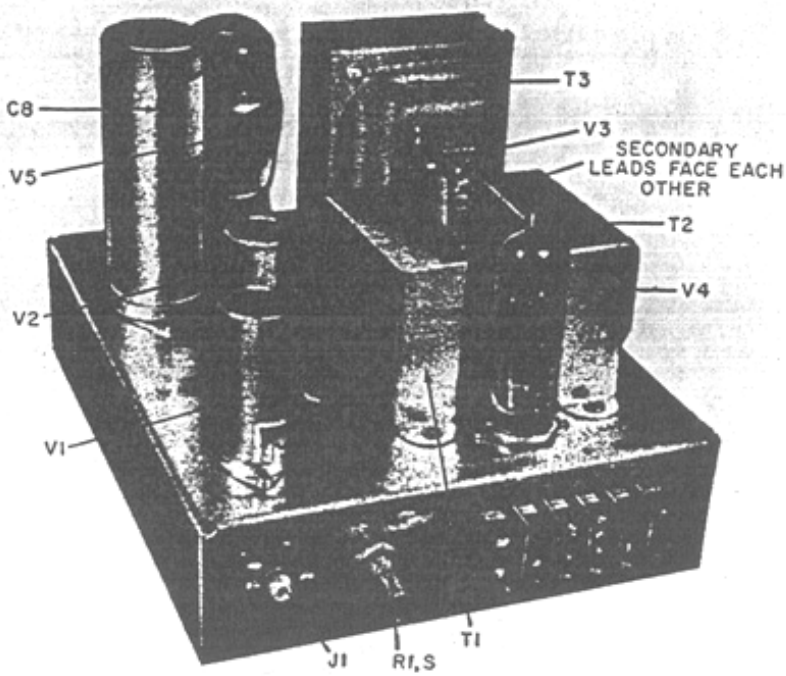

Top view of 15-watt amplifier shows large-parts layout.

Trouble with motorboating

Quite a few ran into this trouble when they coupled on a preamplifier, but usually only when the bass boost was turned well up. Sometimes just connecting the preamplifier to the main amplifier started it, regardless of any setting of controls. These differences depended on the type of preamplifier circuit used.

The motorboating is due to insufficient decoupling in the B-plus supply to the preamplifier. As a result, there is enough feedback from the power output stage to the preamplifier stages to cause low-frequency oscillation. Fig. 1 shows the original circuit. The take off point for the preamplifier's B-plus (marked 240 v) has proved quite successful in many instances. But where instability has occurred, it has always been cured by adding a separate feed point for the preamplifier, as shown in Fig. 2. Using a separate feed permits better filtering, without causing loss of voltage to the first stage of the twin coupled amplifier.

Use a resistance that will drop between 50 and 100 volts. (Use Ohm's law to calculate the drop from the preamplifier tube currents.) Use enough electrolytic capacitance to get adequate decoupling (stop instability) or eliminate hum from the preamplifier stages.

Loss of bass

Two or three have found the twin-coupled produces a bass loss, in comparison with some other amplifiers, although otherwise its performance is completely satisfactory.

This is invariably due to poor matching. In two instances the reader was using the twin-coupled with a ceramic or crystal pickup, without any preamplifier. This will work, but the input

resistance of the amplifier as originally built is too low—causing this bass loss —as well as some loss of sensitivity.

The remedy is simple. Just change the input control from 100,000 ohms to 1 megohm or higher.

Another case where the preamplifier had the tone controls in its output circuit showed the same trouble. Here the bass boost works effectively only if the input to the main amplifier is at least 1 megohm and preferably higher. Making the same change remedied matters here too.

More gain needed

This complaint also came from those who used ceramic pickups without a preamplifier. It is not too difficult to remedy. The gain can be increased by reducing the feedback. Besides increasing the value of the feedback resistors, the balance of the voltage fed to the second half of the 12AX7 needs readjusting. The table gives approximate alternative values. If you wish, you can use a potentiometer to make fine adjustment, as shown in Fig. 3, the same as for the original circuit.

A few found insufficient gain because the preamplifier they are using gives less than a volt output. Surprisingly, there are preamplifiers that give less than a volt output even when given more than a volt input. This is because the gain does not equal the losses introduced by the tone control circuits.

Tone controls

Several people asked how treble and bass controls can be added to the twin-coupled amplifier. It is feasible to do this only by adding another stage. Also, where full output is required for less than a volt input, an extra stage is the better way of remedying matters because it avoids sacrificing feedback. Fig. 4 shows circuits using one half of a 12AU7. Other tubes with similar specifications can also be used.

When an extra stage is added for use with another preamplifier that has insufficient output, extra care is needed in decoupling the B-plus feed for the preamplifier. Fig. 2 shows the combined feed arrangement. Values will have to be determined by experiment. First see how much you can drop the B-plus voltage in resistor R without restricting the preamplifier output or making it distort. The value of R will depend on the voltage drop you can stand and the total current drop of the preamplifier. Having found a suitable value of R by experiment, make the value of C large enough to prevent instability at all settings of the preamplifier tone controls, or to eliminate hum induced in these stages.

Voice-coil feedback

That voice-coil feedback experiment of mine, described in RADIO-ELECTRONICS in October, 1956, inspired some to want to combine it with the twin-coupled circuit. As described in that article, the feedback must be worked out individually according to speaker and amplifier characteristics. But Fig. 5 is a good starting point, using the

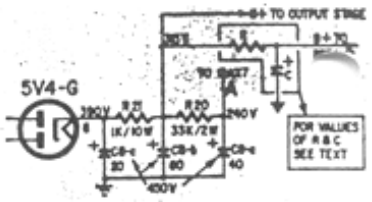

Fig. 2—Power takeoff point A for additional stage. Additional decoupling provides power takeoff for preamp.

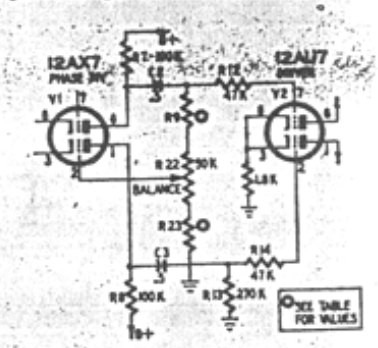

Fig. 3—Balance control for phase inverter.

Revision of Values to Get More Gain

Approx. feedback (db)	R4, R5 (Kilohms)	R9 (Fig. 3) (Kilohms)	R10 (Kilohms)	R23 (Fig. 3) (Kilohms)
14 (original)	150	220	68	47
12	220	220	51	33
8	470	270	33	10

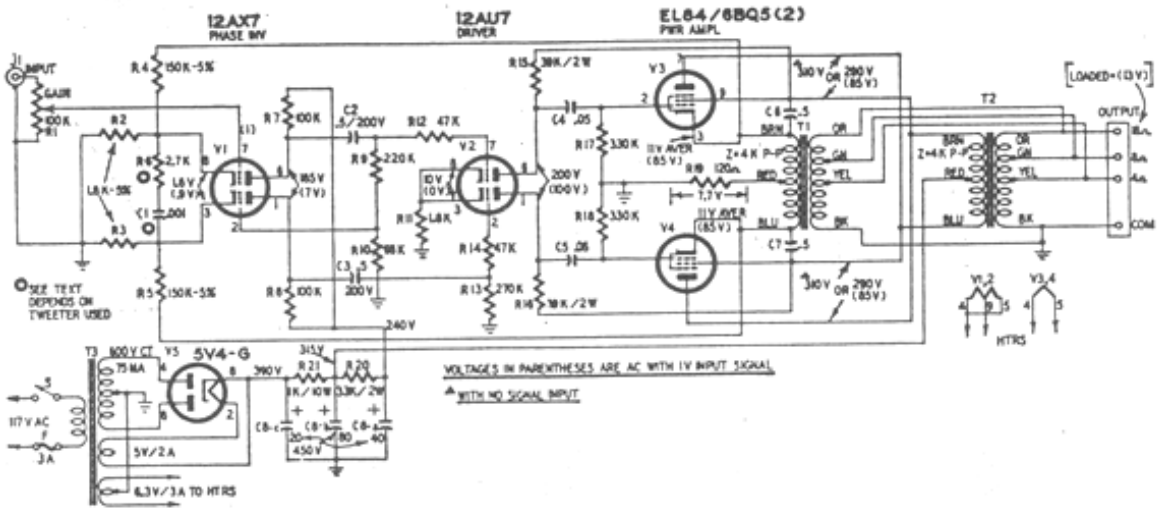

R1—pot, 100,000 ohms, audio taper, with spst switch
R2, 3—1,800 ohms, 5%
R4, 5—150,000 ohms, 5%
R6—2,700 ohms, 5%
R7, 8—100,000 ohms
R9—220,000 ohms
R10—68,000 ohms
R11—1,800 ohms
R12, 14—47,000 ohms
R13, 26—270,000 ohms
R15, 16—39,000 ohms, 2 watts
R17, 18—330,000 ohms
R19—120 ohms, 2 watts
R20—33,000 ohms, 2 watts
R21—1,000 ohms, 10 watts, wirewound
R22—pot, 50,000 ohms, linear taper
R23—47,000 ohms
R24, 25—100,000 ohms
All resistors ½ watt, 10% unless noted
C1—.001 µf
C2, 3—0.5 µf, 200 volts, paper tubular
C4, 5—.05 µf, 600 volts
C6, 7—0.5 µf, 600 volts, paper tubular
C8—40-80-20 µf, 450 volts, electrolytic, can type
F—Fuse, 3 amp
J1, 2—phono jacks
S—spst switch on R1
T1, 2—output transformers, 7½ watts, 4,000 ohms, plate to plate ct; 8-, 16-, 32-ohm secondary (Stancor A-8094, Thordarson Meissner 22S21, Merit A-2997, Triad S-34X)
T3—power transformer: primary, 117 volts; secondary, 600 volts, ct, 75 ma; 5 volts, 2 amp; 6.3 volts, 3 amp. (Triad R9A, Chicago PV70A or equivalent)
V1—12AX7
V2—12AU7
V3, 4—EL84
V5—5V4-G
Chassis, 9 x 7 x 2 inches
Sockets, 9-pin shielded (2)
Sockets, 9-pin unshielded (2)
Socket, octal
Fuse extractor post
Barrier strip, Cinch-Jones 4-141 or equiv.
Grommets, ¼ inch (4)
Grommet, ¼ inch
Tie strip, Cinch-Jones 52A
Tie strip, Cinch-Jones 53C (one mounting lug removed)
Miscellaneous hardware

Fig. 1—Circuit of the basic twin-coupled amplifier.

original twin-coupled as a basis. Change R2, R3 to 2,700 ohms, 5%. The 0.1-μf capacitor in Fig. 5 bypasses voice-coil feedback above 1,000 cycles. The .003-μf capacitors limit electrical feedback to frequencies above this point. R6 and C1 level off the high-frequency response of the amplifier. Their values may be varied for smoothest response when using voice-coil feedback. They are not necessary when using an electrostatic tweeter.

It may be hard to get very much feedback this way, because there is not too much gain available. On the other hand, remember that feedback obtained this way is far more effective in reducing *overall* distortion than amplifier feedback alone.

I would not recommend tackling this project unless you have an audio oscillator so you can check frequency response and make the necessary circuit adjustments to get balanced performance.

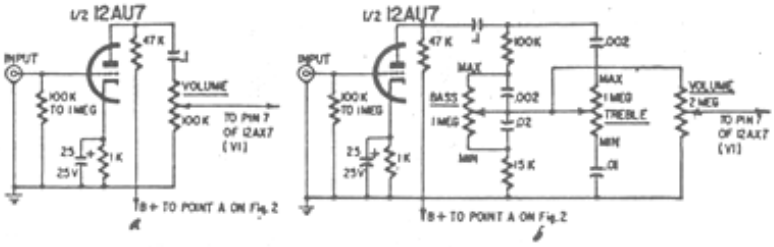

Fig. 4—Extra stage gives (a) extra gain, (b) tone controls.

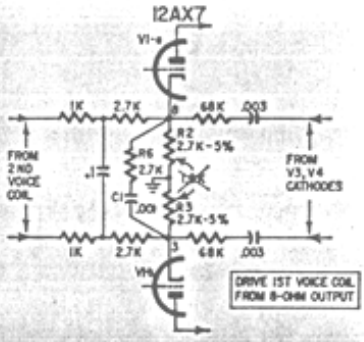

Fig. 5 — Second voice coil provides feedback.

Underchassis view of twin-coupled high-fidelity amplifier.

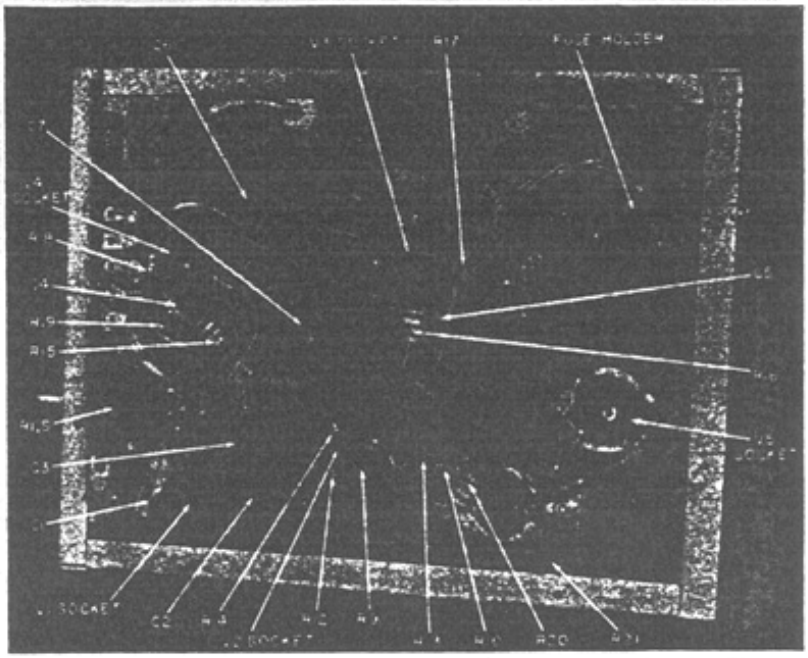

A preamplifier

This is something I still hope to get made up in due course, for publication in this magazine. Many readers have requested it. The problem is that scarcely any two readers want the *same* preamplifier. Some want the bare essentials: equalization but no tone controls, loudness compensation or filtering of any kind (rumble, scratch, etc.); others want "the works". Yet others would like this feature but not that, in various combinations. Finally stereo has thrown in a whole lot of other ideas, including how to arrange for balance and combined control facilities.

What I hope to do when time permits is develop a basic design with a number of circuit elements that can be combined in custom fashion to suit everyone's individual need. If you want the bare essential and think tone controls are superfluous to high fidelity, then build it that way. If you want any particular feature, add it as required, in the appropriate circuit position. But this approach needs careful planning and circuit workout to make sure everyone really gets what he wants.

More power

A large percentage of readers have been asking for more power. Some have even built two amplifiers and paralleled them. I am told this works quite well. But I am not in favor of it, for if either amplifier deteriorates, it will load down the other. This will give you even less power than one amplifier by itself. To me this doubles the opportunity for failure.

Several amplifier manufacturers use parallel operation (with the same theoretical disadvantage) and say they get no adverse complaints. This seems to mean equipment is so much more reliable these days that even doubling the chance of failure does not make the total liability big enough to matter!

Probably the main objection to parallel operation is that it doubles the work and cost. Some have gotten more power from the circuit merely by changing tubes and making some corresponding changes in the power supply and circuit values. To a certain extent this works. How much more power you can get depends to some extent on whether you are prepared to sacrifice some maximum power at the extreme low end—20 to 30 cycles.

Some manufacturers are using the circuit and have larger transformers made specifically for them. But this will not help readers, because such transformers are available only on quantity order. However, transformer manufacturers have now made a larger-version twin-coupled output transformer available as a catalog item, so that problem is now solved.

In a later issue we will show how to go about setting up a larger version, tailored to your own requirements or choice of tubes. You may use either the original transformer or the new larger version. Another thing we propose to include is how to use a transformer *input* circuit. This has been asked for two or three times. It seems the one-time prejudice against audio transformers is fading. There are stock transformers that will serve for this use without the manufacturers having to invent a new catalog number! END

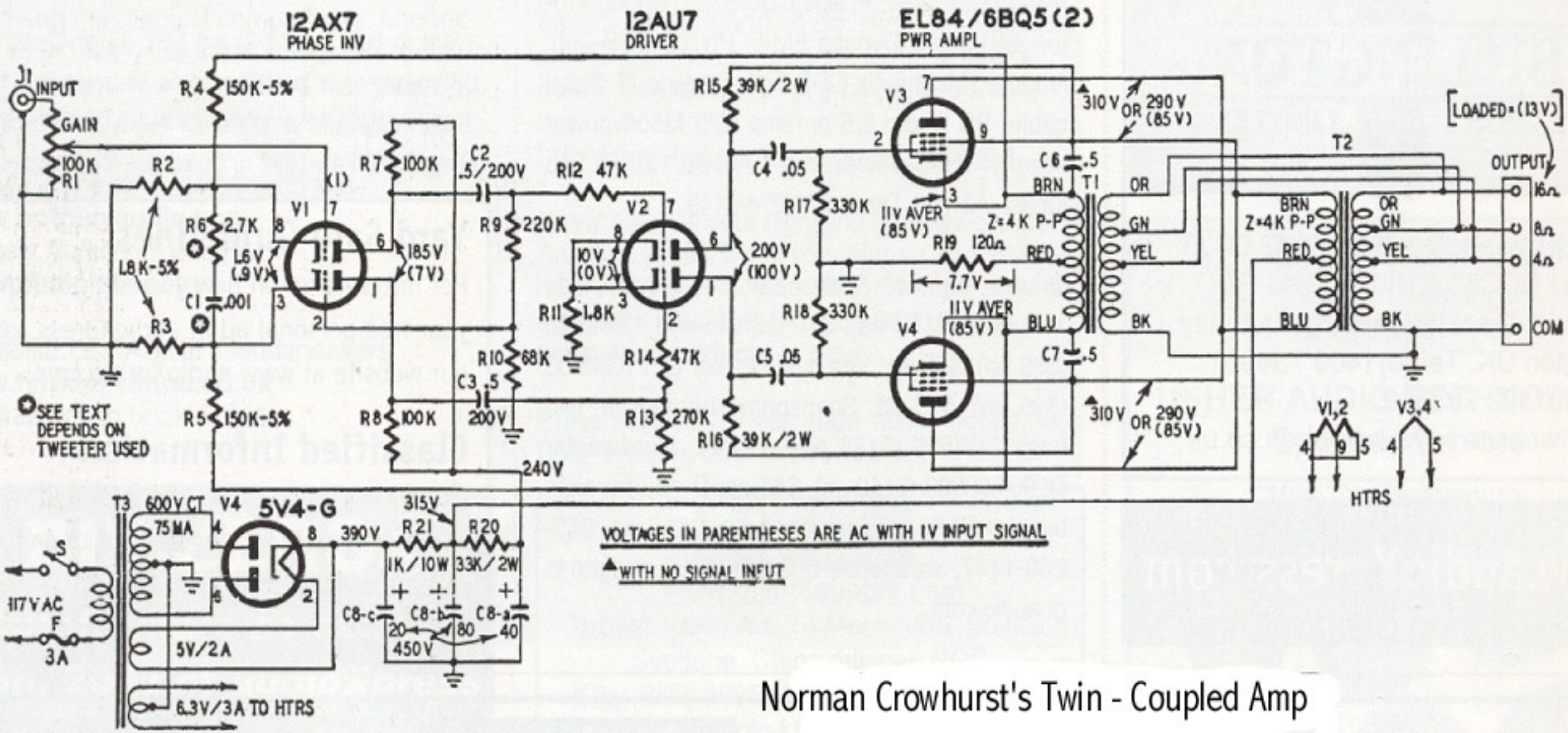

Norman Crowhurst's Twin - Coupled Amp